■ Ku-band PLL LNB - Internal Reference (L.O. Stability: ±3 ppm) -

MODEL No. **NJR2835S/36S/37S/39S** series

< Features >

* Low Noise Figure
- Noise Figure: 0.8 dB

* Low DC Current Drain
- DC Current Drain: 200 mA

* Small Size & Light Weight
- Weight: 260 g

* RoHS Compliance

< Line-Up >

Model No.	RF Frequency	Local Frequency	IF Connector	Local Stability	IF Connector	Power Supply
NJR2837S	10.95 to 11.70GHz	10.00 GHz	950 to 1,700 MHz	+/- 3 ppm	F-type	+24 VDC (+12 to +24 VDC)
NJR2837SN					N-type	
NJR2839S	11.20 to 11.70 GHz	10.25 GHz	950 to 1,450 MHz		F-type	
NJR2839SN					N-type	
NJR2835S	11.70 to 12.20 GHz	10.75 GHz			F-type	
NJR2835SN					N-type	
NJR2836S	12.25 to 12.75 GHz	11.30 GHz	950 to 1,450 MHz		F-type	
NJR2836SN					N-type	

Frequency Matrix

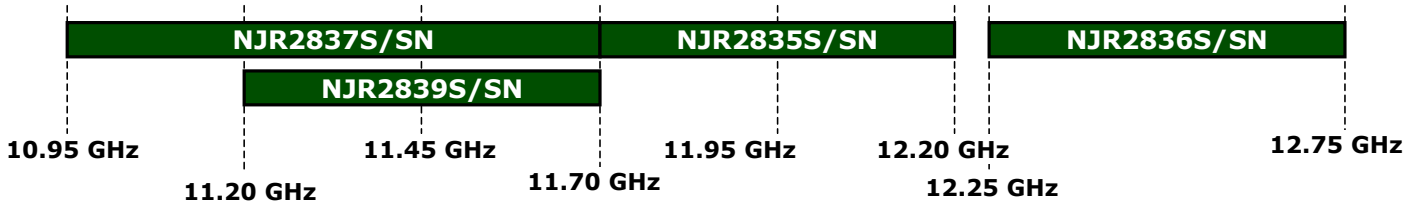

Note: The contents of this sheet are subject to change without notice.

Copyright © 2009 New Japan Radio Co., Ltd.

■ Ku-band PLL LNB - Internal Reference (L.O. Stability: ±3 ppm) -

MODEL No. **NJR2835S/36S/37S/39S** series

< Specifications >

Item	Specifications
Input Interface	Waveguide, WR75 (with Groove)
Output Interface	N-type, female (50 ohm) [Model No.: NJR2835SN/36SN/37SN/39SN]
	F-type, female (75 ohm) [Model No.: NJR2835S/36S/37S/39S]
Noise Figure (Ta.: +25 C)	0.8 dB typ., 1.0 dB max.
Linear Gain (Ta.: +25 C)	60 dB typ., 55 dB min.
Local Stability	+/-2.5 ppm (Ta.: -30 to +60 C)
	+/-3.0 ppm (Ta.: -40 to +60 C)
L.O. Phase Noise	-70 dBc/Hz typ. @ 100 Hz
	-80 dBc/Hz typ. @ 1 kHz
L.O. Leakage Level	-25 dBm max. at the IF Output Connector
	-60 dBm max. at the RF Input Flange
Spurious	a) -140 dBm max. at input, Fixed frequency spur, unrelated to test CW signal (Measured at specified IF band).
	b) -55 dBc max. with test CW signal -10 dBm IF output (Measured at specified IF band).
Input V.S.W.R.	2.5 : 1 typ.
Output V.S.W.R.	2.3 : 1 max.
Power Requirement	+24 VDC (+12 to +24 VDC)
Current Drain	200 mA max.
Temperature Range (ambient)	-40 to +60 C (operating), -40 to +80 C (storage)
Dimension & Housing	100.5 mm (L) x 40 mm (W) x 40 mm (H)
(without Interface Connectors)	[3.96" (L) x 1.57" (W) x 1.57" (H)]
Weight	260 g [0.57 lbs]

Note: The contents of this sheet are subject to change without notice.

Copyright © 2009 New Japan Radio Co., Ltd.

■ Ku-band PLL LNB - Internal Reference (L.O. Stability: ±3 ppm) -

MODEL No. **NJR2835S/36S/37S/39S** series

< Outline Drawing >

NJR2835S/36S/37S/39S

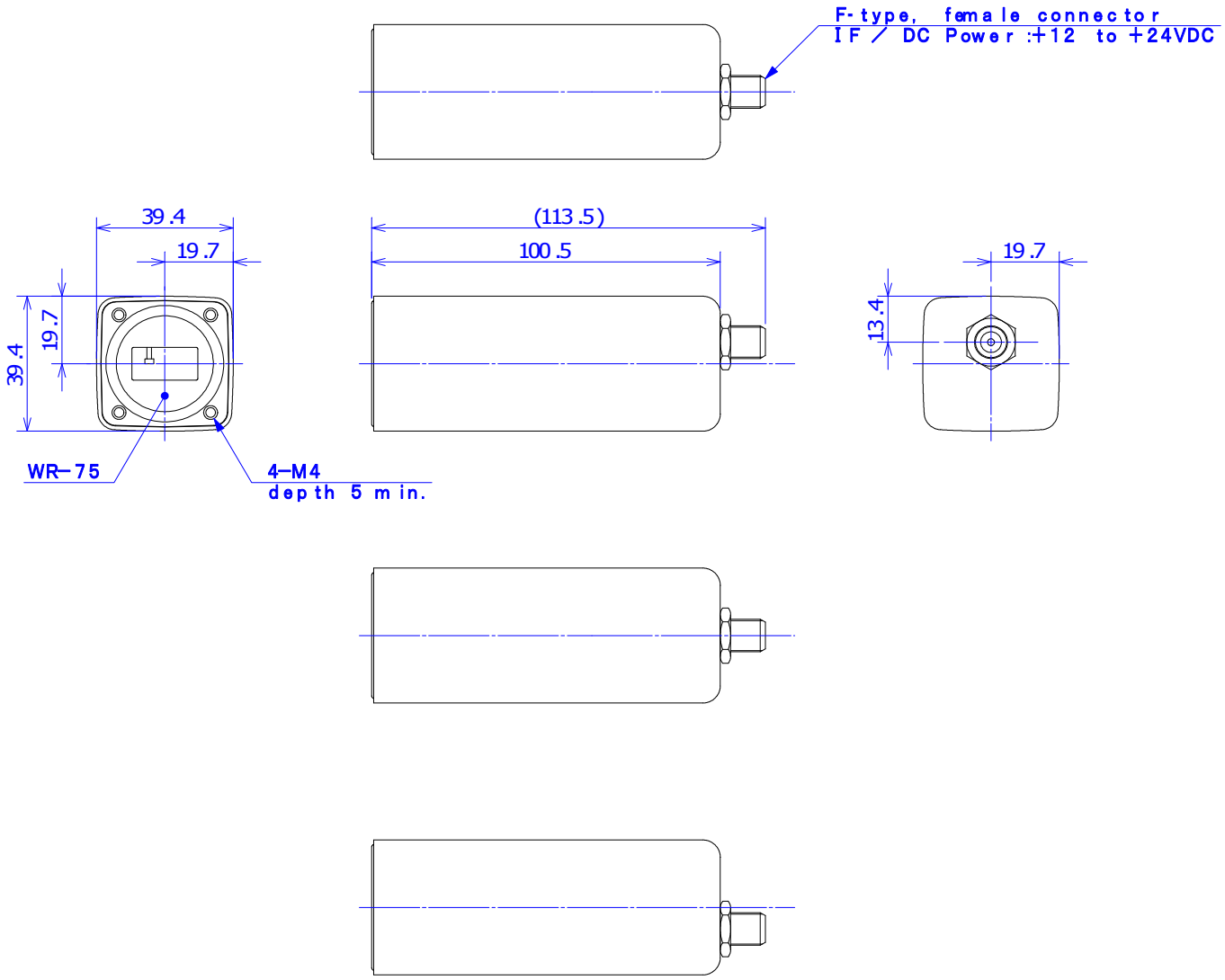

Unit: mm

Copyright © 2009 New Japan Radio Co., Ltd.

■ Ku-band PLL LNB - Internal Reference (L.O. Stability: ±3 ppm) -

MODEL No. **NJR2835S/36S/37S/39S** series

< Outline Drawing >
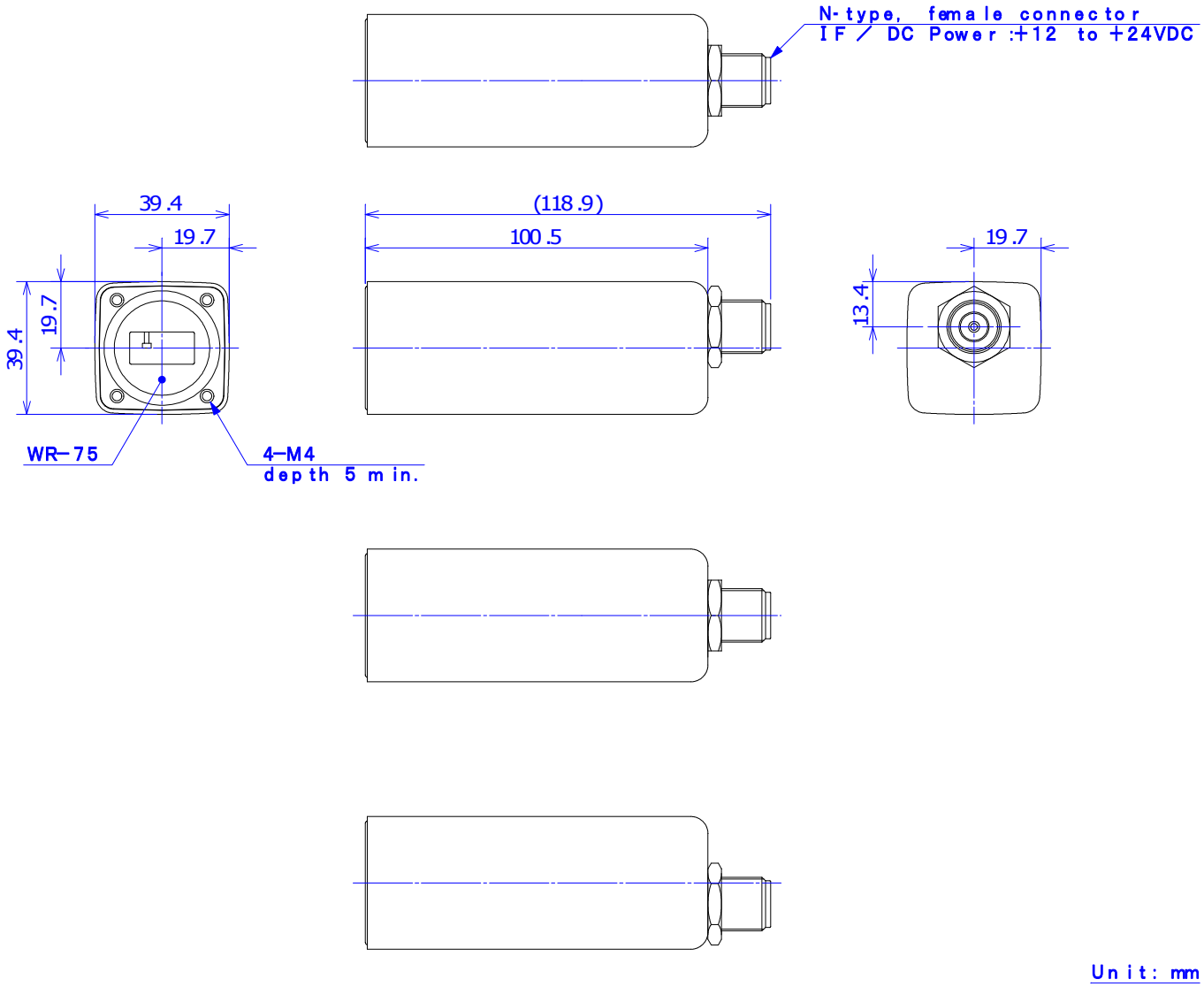
NJR2835SN/36SN/37SN/39SN